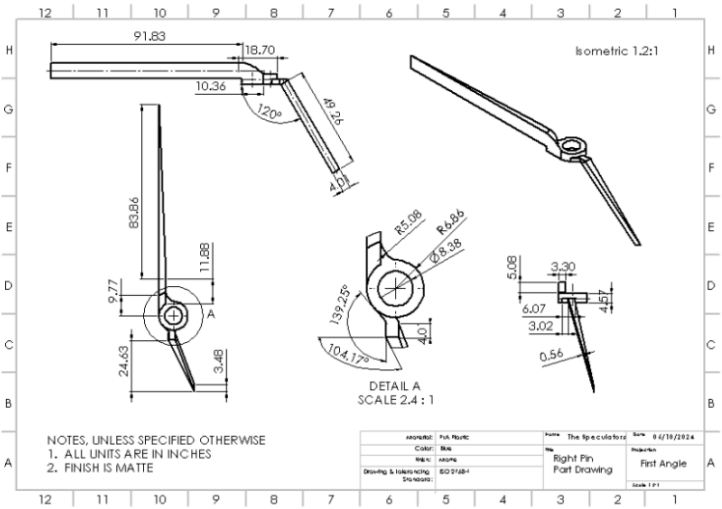


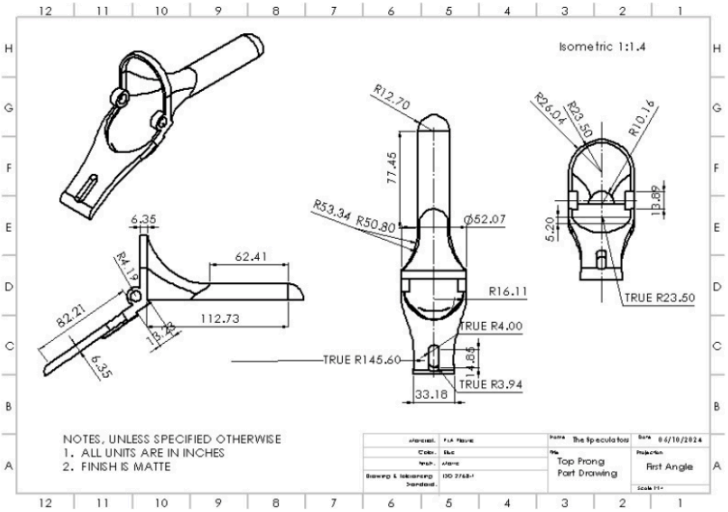


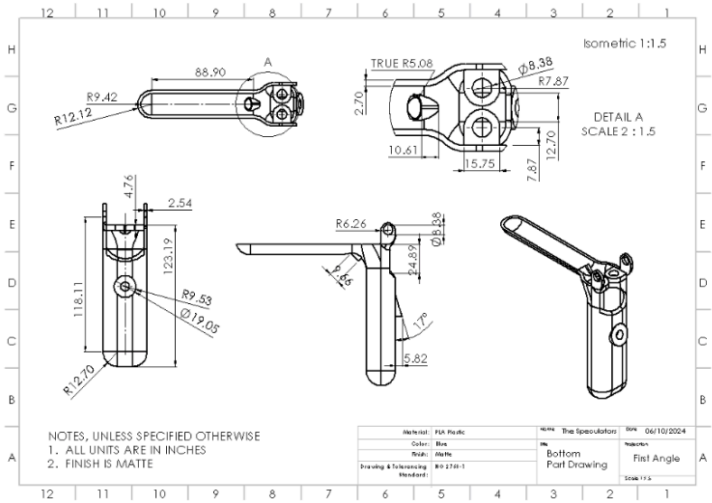


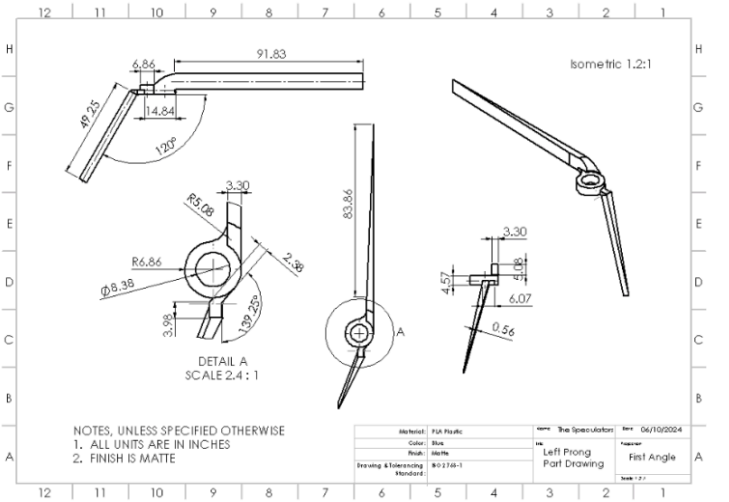


| ITEM NO. | PART NUMBER | Weight | MATERIALS | QTY. |
|---|---|---|---|---|
| 1 | speculumbottomprong | 49.85 | PLA Plastic | 1 |
| 2 | speculumleftprong | 2.25 | PLA Plastic | 1 |
| 3 | speculumrightprong | 2.86 | PLA Plastic | 1 |
| 4 | speculumtopprong | 42.92 | PLA Plastic | 1 |

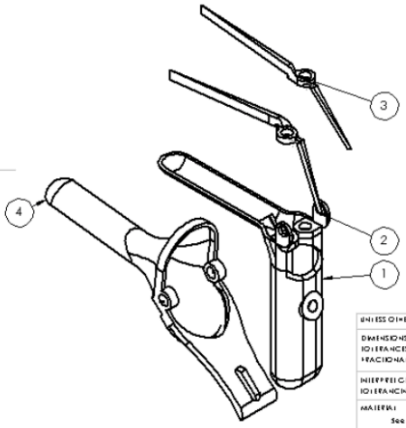


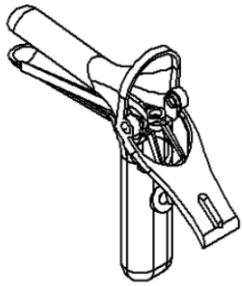

UNLESS OTHERWISE SPECIFIED
DIMENSIONS ARE IN INCHES
TOLERANCES:
FRACTIONAL ±0.001
ANGULAR: ±0.5°
MATERIAL: See BOM
FINISH: Satin Finish
DO NOT SCALE DRAWING

| | NAME | DATE |
|---|---|---|
| DRAWN | The Speculators | 06/10/2024 |

COMMENTS: all weight measured in grams

TITLE: Speculum Assembly Drawing

COMPANY NAME: BME 60C The Speculators

WEIGHT: 99.79032 grams
SCALE: 1:2.1
SHEET 1 OF 1